L.M. | 47-900KW

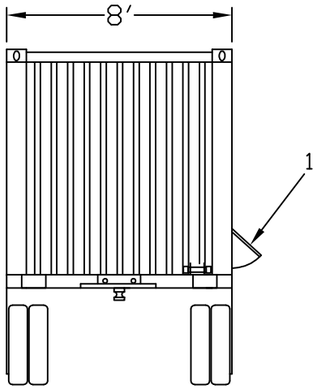

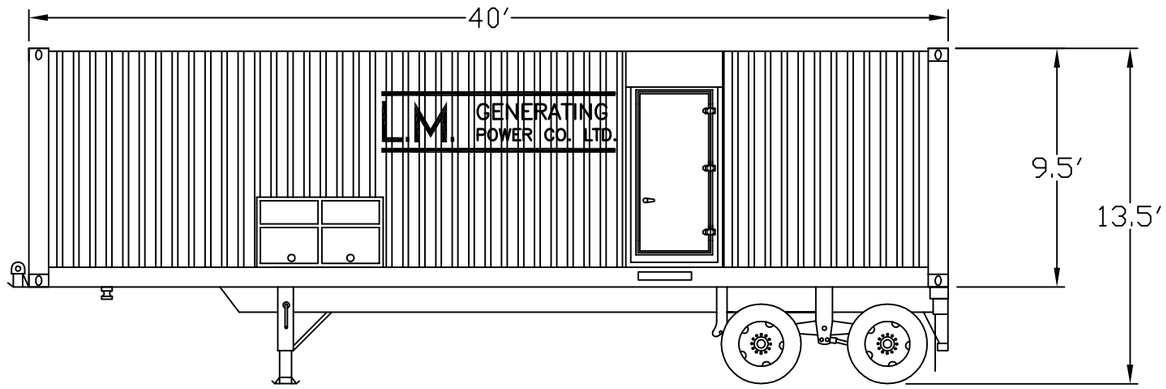

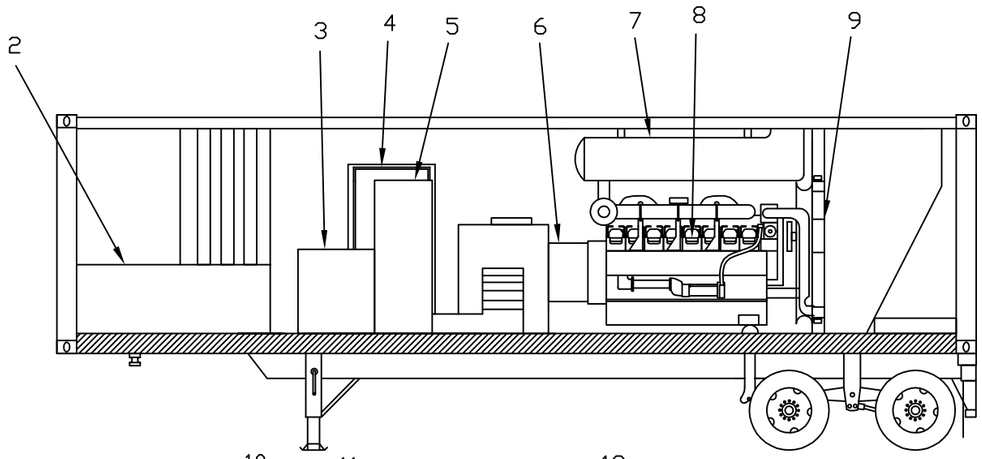

TECHNICAL DATA

(1) CABLE ACCESS COMPARTMENT 600V/480V
(2) FUEL TANK
(3) PERSONNEL ENTRANCE DOOR
(4) AIR INLET
(5) 3500B ENGINE
(6) MUFFLERS
(7) ENGINE
(8) RADIATOR
(9) EXHAUST
(10) FUEL/WATER SEPARATORS
(11) TRANSFORMER
(12) SWITCHGEAR
(13) GENERATOR
(14) BATTERIES
(15) REAR DOORS
(16) BATTERY CHARGER
(17) EXHAUST (OPTION)
(18) CIRCUIT BREAKER AND OUTLETS
(19) FUEL TRANSFER PUMP
(20) CONTROL PANEL FOR THE FUEL TRANSFER SYSTEM
(21) OUTSIDE DOOR FOR THE FUEL FILLER (OPTION)
(22) REAR DOORS
(23) CABLE ACCESS DOORS FOR 600V & 480V

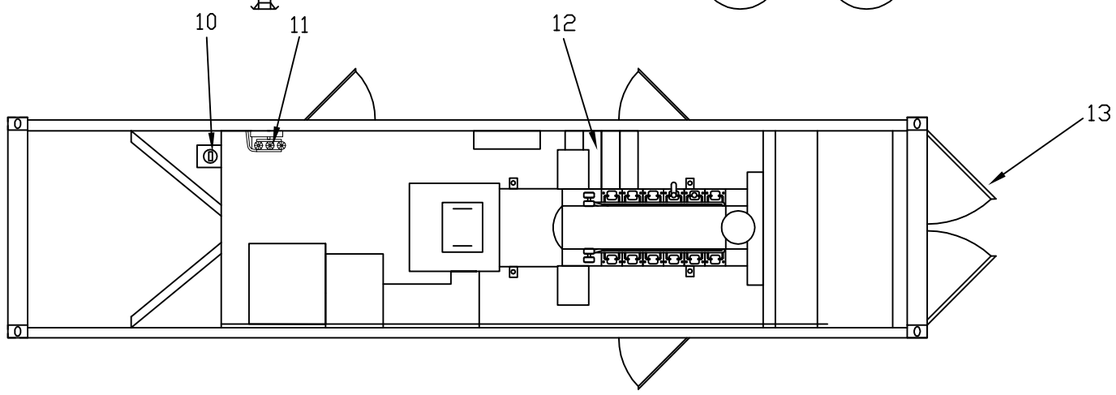

GENERATOR SET	POWER	VOLTAGE	CURRENT PRIME @ 0.8PF	CURRENT STBY @ 0.8PF	FREQUENCY	FUEL TANK CAPACITY	FUEL CONSUMPTION (75% LOAD)	FUEL CONSUMPTION (100% LOAD)
L.M.47	900KW	600V/480V/208V	800A/1000A/2300A	900A/1100A/2600A	60 HZ	4700 LITERS	378.1 L/HR	504.7 L/HR

	1E2733	DRAWING-AUTOCAD
	1E0011	INTPR & TDL
	SPEC NO.	NAME
DRN		
CHK		
APPD		
SCALE		
SHEET 1		DATE

L.M. GENERATING POWER CO. LTD.

INSTRUCTION-SVGR
600V/480V/208V